WEAK AND STRONG FORCE

home to previous (see paper below 2024)

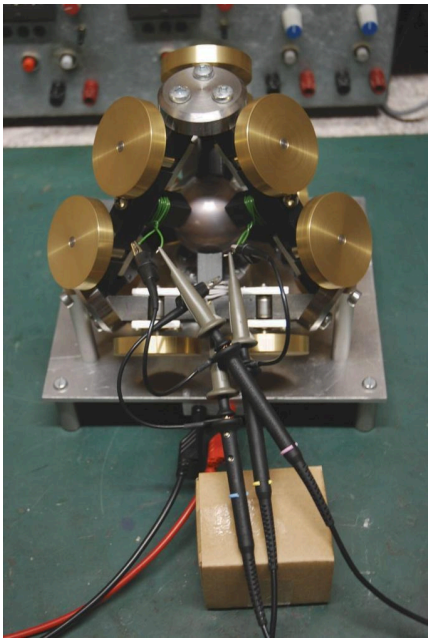

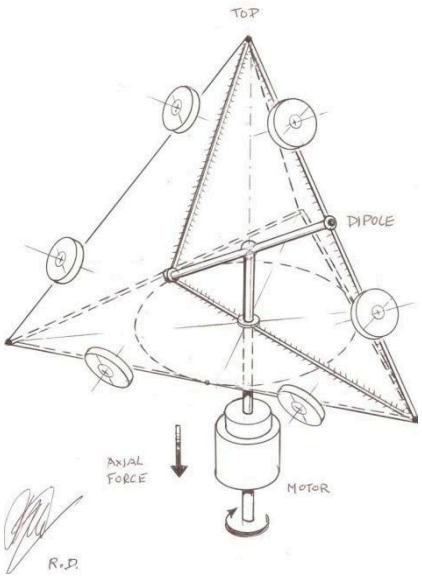

Learned from the magnetic analogue was the axial force along the driving shaft for the centre rotor needed to be restrained by a dedicated bearing. *Link to Harald Chmela* : www.hcrs.at/3iarga.htm

Weak and strong force

Between two crossing ribs in the equilateral pyramid exist a dipole of dark matter. The definition of a dipole as in a permanent bar magnet is allowed because the momentum of the medium is in one direction. Driving the dipole in a weak iron frame to conduct the magnetic flux with an electric motor causes sinus magnetic wave signs in the weak yoke.

What is most significant is that the bearing in the centre at the dipole causes a strong axial force. The supposition is that the axial forces associates with the strong or weak force in proton and electrons, leptons. The configuration should only be as shown below as two upside/down pyramids framed consequently nullifying the axial force and then making room for the electromagnetic forces, electric charge in the proton or electron.

The other guess is that the weak force is carried by μ- pseudo vector neutrinos with rest mass of $1/3m_e$ and the strong force is carried by τ-pseudos having a rest mass ratio of $34.259 /0.333 = 102.777m_e$

End cap symmetry, charge formation synchronised to binary extraction **end cap symmetry**

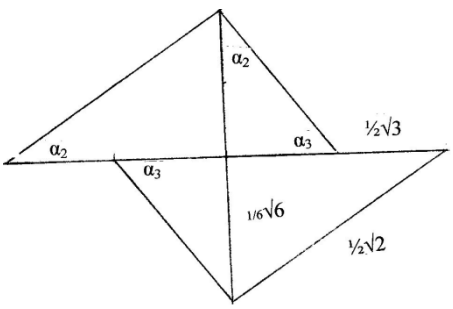

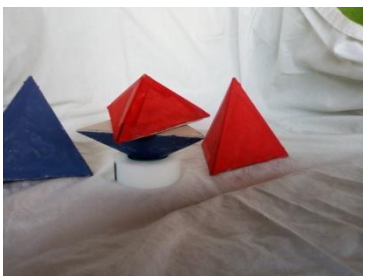

End cap symmetries are cubic pyramid configurations in which the top of the pyramid has 90° angles and the three pyramid planes standing up are right angle triangles while the base plane is an equilateral triangle. The electron consists solely of a cubic pyramid while the end cap for the proton overlaps the equilateral pyramid strong force configuration. The imaginary standing up ribs as time intervals can be neglected. Similarly the time up and conjugated time down intervals in the cubic arrangement are not real but point to conjugated electric charge induction, the two tops are the photon distance to configure the particle as real in a 3D dark matter environment.

For the electron by definition, up is for the three *normal* pseudos (negative charge induction) and down are conjugated mirror images or ghosts of the three real μ-pseudos giving negative charge. The mirror ghosts are composed of the ultra light dark matter medium following half light speed momentum. As soon as the lower states are filled with μ- pseudos, the configuration is not stable or marginal stable. It is the induction photon state between electric charge and the conservation of magnetic toroidal induction symmetry for the base triangles that gives stable electromagnetic alternation, generating electric charge polarisation surrounding the three μ-pseudos captivated in the ultra fast medium. While the state of magnetic toroidal induction is conserved in gravity or neutral acceleration in collective coherence.

For the proton the end cap symmetry is similar only the quark cell block has to be captivated by the electromagnetic forces. So the up state is *for conjugated* τ-pseudos giving positive electric charge induction and down is the mirror imaging in the ultra fast medium but with normal mode of ghost pseudos.

The **neutron** has a marginal stable state because the end cap is completely filled with three μ-pseudos up and three μ-pseudos down causing an anti spin rotation in the base planes compared to the overall spin of the proton. The anomalous magnetic moment of the neutron is negative to the one of the proton normal state of matter.

Binary extraction coding in pyramid configuration binary extraction
First approach
In the figure the base plane of the pyramid configuration has 60° angle between them. The top to top PQ represents a time to a conjugated time interval related as equilateral distancing for the up and down symmetry while up represents normal and down conjugation state.

Pseudo particles of unit cells reside in the corners of the base triangle having the onset p_n p_n p_n and p_c p_c p_c . Every p_n exchanges to a p_c at the two levels giving a total of 6 exchanges. Each time one p_c (x) over three p_n(up) (x= 1, 2 or 3). The following step is that the situation is inverted; p_c's are up and p_n's are down, determining a flip over to restore the original initial state. Then in total 12 sequential time steps or a binary time string of 12 time intervals are needed as basic extraction code for the overall qubit state externally. This is the basic concept for the weak or strong force exchange.

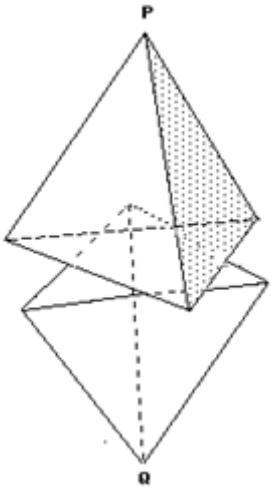

To come to a144 sequential time string, imagine a plane with two PQ axis perpendicular to each other and for the integer 1728 one needs a Cartesian coordinates system $12^3 = 1728$ which apparently turns out to be the rest mass of the quark cell for the proton. A time string of 12^4 gives the breakdown of sub particle configuration of mixes of μ- and τ- pseudos while 12^5 is the end situation or Higgs' state to photons contracted to Planck's length of the pseudo vector cells.

So a Cartesian coordinate system for clockwise or anticlockwise gives the distinction between matter and antimatter. But if PQ is associated with conjugated induction of electric charge then PQ can be positive and the reverse QP (top) can be negative charge. So according to the simplified scheme there are two normal matters and two anti- matters.

Linearization transformation of triplets. See the description extraction by colour exchange.
To sort out the above basic concept in three dimensions of the quark cell is in first instance too complex.
But the integer arrangement of 1728 can also be the end step in PQ direction of 16 triplets of 36 m_e as the τ- pseudo making 16 x 108 = 1728 me while the rest mass for τ-pseudo is 34.259 m_e. Namely 4 x 34.259 = 137.036 the reciprocal of the fine structure for the electron. The 17th triplet gives the proton of 1728 + 108 =1836 and follows the end cap symmetry for electric charge formation. The cut off for the integer 17 is half the rest mass of a τ-pseudo of 34.259/2 (due to ½ c condition).The triplet confirmation for linearization is:

3 x 34.259 = 102.777 108 – 102.777 = 5.223 = $3(\sqrt{3} + 8.9492\ 10^{-3})$

17 x $8.9492\ 10^{-3}$ = 0.15214

Observed 0.15267 or (0.153) m_e .The last suggesting the binding energy due to the external ultra light dark matter medium.

The electron follows the reciprocal of 144 as discussed above but the linearization transformation is also allowed as 16 x 9 =144. Then giving with reciprocal fine structure constant 137.0360 of the electron:

144 -137.036 = 6.964 $4(\sqrt{3} + 8.9492\ 10^{-3}) = 6.964$. The factor 4 in the same expression of √3 compares to the factor of 3 above. Showing that the agreement to the fine structure for the proton.

Binary extraction by colour quark exchange. Second approach
Imagine two opposing pyramids according to the figure. In the base planes reside the unit quarks equal to the mass of the electron as a unit of rest mass. The two opposing tops of the pyramids are for electric charge conjugation. The two base planes are separated by exactly 60° angles. In the up plane are the normal and in the down plane are the conjugated quarks which is the onset to start the colour exchange. Let us say normal has up acceleration and down is the opposite acceleration, the spin or angular momentum is the same for both. The number of quarks in the three up positions is 1n, 2n, 3n and in the down 1c, 2c, 3c or use colours, red green, blue for up and orange yellow, purple down or vice versa..

So if one follows one quark it alternates in three shifts over six positions from up to down then to return to the initial state. However the two other quarks up at the onset have to shift in the same forward direction of the spin over the 6 positions giving in total 18 exchanges which normalise to 36 due to the ½ c maximum momentum of the quarks. Further because the pseudo cells have three independent components there are 3 x 36 = 108 sequences between the two base planes.

The question is have we covered all combinations? One is left with 16 states of levels between up and down of quarks. The next question is, is one allowed to apply a second normalisation of ½ c with respect to the photon state? The conjugated exchange for electric charge has not been considered so far which reduces the options of 16 to 8. It also means that the quark cell of 1728 m_e generates no charge because one deals with an even number of possibilities. The problem of the eight is $2^3 = 8$. It means that one has to consider the cubic state in the three acceleration directions of the pseudo vector cells following Cartesian coordinates which comes to neutral charge generation. So the 16 combinations in sequence have nothing to do with the shifts due to colour exchange for normal to conjugated.
As a last step, randomise this explanation in sequences and one generates the colour forces for quarks.
Compliance to Newton's laws:

Acceleration times mass equals force Displacement times force equals work

Internal dynamic energy(work) is rest mass plus rotation energy.

Compliance to Maxwell's laws:

1728 acceleration shifts for neutral charge conjugation induction because of even integers. Per shift a unit photon 'charge' is induced or quantum unit charge.

COHERENT COULOMB CHARGE INDUCTION INTO MAGNETIC ENERGY STRINGS BY THE UTRA FAST AND LIGHT DARK MATTER MEDIUM (2024)

Par 1 Introduction
By applying Sacharov's law of induction the mediating mass of m_m any atom was derived in (rel 1)
Given by a simple expression: $m_m = \sqrt{(m_{at} /4\alpha)}$
With m_{at} the atomic mass divided by the number of nucleons of the atom and α the fine structure constant of the electron. The factor 4 is due to both Fermi spins electrons and generalised protons. It is the induced m_{at} and m_m are dark matter induced parameters.

The mediating mass is the important induction parameter for any atomic species subjected to coherent or synchronised atomic groups in dynamic gravity generation. Not only that but it can be shown, not proven, that the electric charge of Ze of an atom can be converted into a string magnetic Z- Lamb quanta by the quantum flux $\phi = h/2e$. It is only because the Z magnetic strings in a macro mass can exist long enough for time intervals of the √λ- wavelength of the gravity driven coherent cells of the atomic to dark medium. The √λ-wavelength are not photon wavelengths but equivalent magnetic wavelengths determined by the event λ of the macro mass.

1.1 Results
For a complete understanding of the Coulomb charge induction the quantum mechanical relations of the H atom are needed. These are Hartree potential, Bohr's radius, ϕ, Lamb parameters, 21 cm of the electron calculated from the electric capacity and self induction. If these parameters are linked as momentary parameters the induction relation of the dark matter as $\lambda^2 = R_{sub} R_{lin}$ and $S^2 = R_{sub} R_{lin}^3$ have to be introduced. Here λ is not the event but associated with the charge induction. One has to relate the fundamental λ^2 to ϕ the magnetic quantum flux and S^2 can be associated to the cross section of Bohr's radius while $S^2 /\lambda^2 = Z \lambda_{lamb}$ (magnetic lamb string).
The magnetic $\lambda^2 = \lambda_M^2 = a \phi$ and $S_{bohr}^2 = b^2 R_b^2$ The constants a and b come from the scaling equalities.

1.2 Derivation of the using the relations: $\lambda^2 = R_{sub} R_{lin}$ and $S^2 = R_{sub} R_{lin}^3$
A momentary Coulomb contraction of the electron due to the Z charge attraction in the proton determines that the coherent R_{lin} for the Lamb's shift should be proportional to the square root of Lamb by Z-contraction making the Coulomb contraction inverse proportional to the √Z.
If ($R_{lin} = \sqrt{\lambda} /\sqrt{Z}$) then Bohr's cross section cannot be a constant due to the Z charge induction.

So S^2 defined as Bohr's cross section gives: $S(Bohr)^2 = (R_{sub} = \lambda_e /\sqrt{Z})\{(R_{lin} = \sqrt{Z}\sqrt{\lambda_{lamb}})\}^3$
and $\lambda^2 = R_{sub} (R_{lin} = \sqrt{Z}\sqrt{\lambda})$. The ratio of $(S^2 /\lambda^2) = Z \lambda_{lamb}$ where λ has to comply to quantum flux ϕ as an absolute constant then determining the Bohr's radius has to be a constant to for any atom of Z charge, which is a dark matter induced property of the pseudo vector medium.

Note, No distinction could be made between N_Z the number of Z electrons for contraction induction and only one contraction for λ_e /Z of some magnitude.

1.3 Evaluation with the known parameters Calculation of the constants a and b
Not yet explained are the Lamb shift and Bohr's radius of the H atom and λ_e is the uncertainty length of the electron. All these properties follow in the next paragraph.
The observed values of the parameters are:

$\lambda_{lamb} = 5.06016\ 10^{-7}$ m, $R_{Bohr} = 5.292\ 10^{-11}$ m, $\lambda_e = 2.4263\ 10^{-12}$ m $\phi = 2.06798\ 10^{-15}$ Weber

$\sqrt{\lambda_{lamb}} = 7.11348\ 10^{-4}$ $\lambda_M^2 = 2.4263\ 10^{-12} \times 7.11348\ 10^{-4} = 1.75205\ 10^{-15}$ linked to ϕ
$\lambda_M^2 = a \phi$ $a = 1/1.18032$

$(\sqrt{\lambda_{lamb}})^3 = 3.59953\ 10^{-10}$ $S^2 = 2.4263\ 10^{-12} \times 3.59953\ 10^{-10} = 8.73355\ 10^{-22}$
$S_{bohr}^2 = b^2 R_b^2$ $S = 2.95526\ 10^{-11}$ m $b = 5.292 /2.95526\ (10^{-11}) = 1.79071$

Both ratios have to be linked:

$1.18032 \times 1.79071 = 2.118768$ $1.79071 / 1.18032 = 1.513446$

2.118768 /2 = 1.059384 /1.050818 = 1.008151 1.513446 /1.5 = 1.008964
Deviation 1.008964 /1.008151 = 1.000805 sufficient agreement to confirm the above statement.
The constants 2, 3/2 and 1.050818 = 144/137.036 are well known scaling parameters. The factor 2 represents $(\sqrt{2})^2$ or the reciprocal of ½ c_{eff} for dm acceleration.

Par 2 Following up assessments of the hypothesis for binary gravity generation by Lamb magnetic strings

Lamb shift conjugation to the generalised proton with the electron in any atom consisting of Z protons is the base for coherent magnetic formation in the dark matter medium. It can be shown that the lamb shift gap of 5.060157 10^{-7} m (5.1 10^{-7}) and gap energy of 5.87 10^{-6} eV are constants of the dm medium.

To accommodate the posed hypothesis, return to the fundamental quantum constants. The quantum magnetic flux $\phi = h/2e$ is used to explain superconductivity such as pairing electrons and the Hall effect in electric current conductivity. It seems possible to support the hypothesis.
This is shown with the following classic calculation for the magnetic field within the Hydrogen atom and the Lamb shift interaction by the dark matter medium.

Quantum flux $\phi = h /2e = 2.06798\ 10^{-15}$ Weber
Hartree potential $W = e^2 /(4\pi\ \varepsilon_o\ a_o) = 4.35975\ 10^{-18}$ joule
Bohr radius $a_o = (h /\alpha)(1 /2\pi\ m_e\ c) = 5.29\ 177\ 10^{-11}$ m
Flux ϕ H S(cross section) $= \phi /\mu_o = 1.6455\ 10^{-9}$ (amp m)
Flux energy with Hartree potential and Lamb wave length:
$(1.6455\ 10^{-9} /\sqrt{\pi})^2$ x $5.05843\ 10^{-7} = 4.35975\ 10^{-25}$
Hartree corrected for μ_o neglecting the 4π. Dev: 5.060157 /5.05843 = 1.000341

The magnetic energy of the H atom for electron conjugation is equal to the Hartree potential.
With $\alpha = 1 /137.036$ fine structure constant and $\lambda_e = 2.426583\ 10^{-12}$ m. The flux ϕ is divided by the magnetic permeability for vacuum giving H B = B^2 /μ_o in Hartree with $H = \mu_o$ B.
So only in case of the gravitational induction ($m\ M = m_{pl}^2$) the generalised proton condition in the dark matter medium for any Z atom of Z protons can be valid. Consequently if Hartree's potential W having Bohr's radius and the flux ϕ are sole parameters of the dark matter medium then these are independent of any kind of atoms because only the electron mass appears in these quantum relations and the fine structure comes from a dm condition. So far this is a supposition but it means that as well the Lamb shift of 5.1 10^{-7} m and the shift energy of 5.87 10^{-6} eV are constants of the dm medium and independent of the atomic species. Obviously the experimental proposal in chap 6 for gravitational levitation has to give exclusion.

Continuation of the assessment is the determination that the radius of the magnetic flux a_{fl} is always greater than Bohr's radius even if the H atom is ionised.
Note $\phi = 2.068\ 10^{-15}$ Wb Then B =1T making $\pi\ a_{fl}^2 = 2.068\ 10^{-15}$ giving $a_{fl} = 2.57\ 10^{-8}$ m
which is greater than of a_o of Bohr.

In other words it is impossible to generate this magnetic flux with single atoms. The guessed electron relation derived from the Hartree equality magnetic flux is:
$(1.6455\ 10^{-9} /\sqrt{\pi})^2$ x $3.599531\ 10^{-10} = 3.1024\ 10^{-28}$ Joule
With $5.060157\ 10^{-7})^{3/2} = 3.599531\ 10^{-10}$ m
Convert 3.6 10^{-10} into a magnetic cross section and calculate the B:
$B = 2.068\ 10^{-15} /(\pi\ 3.60\ 10^{-10}) = 5.75\ 10^{-6} /\pi = 1.830342\ 10^{-6}$ Tesla

Use this B in the Hartree equality:
$\{(1.830342\ 10^{-6})^2$ x $\pi\ a_{fl}^2$ x $5.060157\ 10^{-7}\} /\ \mu_o = 4.35975\ 10^{-25}$ J
$a_{fl}^2 = 1.02809\ 10^{-13}$ m^2 giving $a_{fl} = 3.207347\ 10^{-7}$ m
Determine deviation to $5.060157\ 10^{-7}$: 1.577657/ 1.5 = 1.051783/ 1.050818 = 1.00092
The value 1.050818 follows from 144/ 137.036 the electron parameters in exchange to the dm medium. 3/2 is the medium formation frequency ratio valid not explained here.

Confirmation of the relation of paired e-pseudos of 1.34 eV and Lamb shift as absolute constant.

$N_n = 220.6808 \times 1728 = 3.8134\ 10^5$ $0.511\ 10^6 / 1.34 = 3.8134\ 10^5$

$1.34 / 5.87\ 10^{-6} = 2.2828\ 10^5$ $3.8134 / 2.2828 = 1.633 = 1.1547\sqrt{2}$

Max energy of e-pseudos expressed in absolute limits of the dark matter medium.

All parameters of the mediating medium are resonance features in this medium. The parameters are Bohr's radius, Lamb wave length of $5.1\ 10^{-7}$m and 21 cm molecule line of Hydrogen. The used quantum expressions are Bohr's magnetic moment for electron and proton, and the quantum flux ($\phi = h/2e = 2.06798\ 10^{-15}$ Wb). Needed the vacuum constants: $\mu_o = 4\pi\ 10^{-7}$ and $\varepsilon_o = 8.842\ 10^{-12}$ due to photon formation and $h = 6.627\ 10^{-34}$ Joule .

In the previous paragraph Bohr's radius a_o had a ratio of $137.036/2\pi = 21.81$ related to the Compton fine structure of 1 /137.036. This is considered the internal ratio for the magnetic moment within the electron. So a momentary closed torus represents the absolute contained magnetic energy within the electron:

$V_{tor} = 2\pi^2 \lambda_e (\lambda_e / 21.81)^2 = 5.92723\ 10^{-37}\ m^3$ $\lambda_e = 2.4263\ 10^{-12}$ m

Calculate B as a unique value from the uncertainty condition h:

$B\ \pi (\lambda_e/21.81)^2 = h$ $B = 1.7042\ 10^{-8}$ T $W_e = V_{tor}\ B^2/\mu_o = 1.3700\ 10^{-46}$ joule

All monetary values.

Theoretical current: $1.602\ 10^{-19}\ c / (2\pi \lambda_e) = 3.153$ Amps (Coulomb times $c = 3\ 10^8$ m/s)

$3.153 \times 21.81 = 68.767$ Amps compared to $2 \times 34.259 = 68.518$ (τ-pseudo's). The momentary stop in current gives the pseudo τ-ratio with respect to the electron.

A magnetic Lamb string induced up to a maximum of 21 cm

Determine the capacity C and self induction L of the electron:

$W_{st} = e^2 / (2\varepsilon_o\ r_e)\ r_e = \lambda_e / 137.036$ $C = 1/(2\varepsilon_o\ r_e) = 3.194\ 10^{24}$ Farad

$\frac{1}{2}\ C\ V^2 = W_e = 1.3700\ 10^{-46}$ J $V = 9.3\ 10^{-36}$ volt

L coefficient in Henry, factor 2 due to $\frac{1}{2}\ c_{eff}$:

$L = \mu_o\ 4\pi^2\ \lambda_e^3 / 137.036^2 = \mu_o \lambda_e^3 / 21.81^2 = 3.77310^{-44}$ Henry

With I = 1.0 Amp then $W_B = \frac{1}{2}\ L\ I^2 = 2 \times 3.773\ 10^{-44} \times 1 / 1.00563 = 7.5045\ 10^{-44}$ J

Confirming Bohr's magneton of the electron.

Then $L\ C = 1.2051\ 10^{-19}$ $1/\sqrt{LC} = 2.881\ 10^9 = 2\pi f$ and $f = 4.585\ 10^8$ Hz

With c: $\lambda = 3.0\ 10^8 / 4.585\ 10^8 = 0.654 > 0.211$ m

If $L = \mu_o\ \lambda_e^3 / 137.036^2 = 9.558\ 10^{-46}$ H $LC = 3.053\ 10^{-21}$

$1/\sqrt{LC} = 1.810\ 10^{10}$ $f = 2.881\ 10^9$ Hz $\lambda = 0.1042$ m

Determined by a factor 2 for 0.211 m wave length and a factor 4 in L the induction coefficient. The factor 2 seems to be a consequence of the ½c effective velocity. So hydrogen molecule wave length 21 cm is a feature between the electron and the dark matter medium.

What is shown is that the electron has fast resonance interference with the dark matter medium. Apparently that fast that the string of Z charge of an atom can be fitted into the virtual contraction parameters of an electron.

The electron inversion of parameters determined by numeric constants

Apply the condition that a sphere volume of radius a_1 determines a torus radius of $a_o = 4/3\pi\ a_1$

$4/3\pi = 4.189$ $2\pi^2 = 19.73920$

1st scaling $\sqrt{137.036} = 11.70623\ (/4.189) = 2.79452$

$137.036 / 2\pi^2 = 6.94234 (/4.189) = (1.65727)^2 = 2.746560$

$2.74656 \times 4.189 = 11.50534$ or 132.3728 $137.036 / 132.3728 = 1.035227$

2nd scaling $2\pi^2 = 19.73920 / 4.189 = 4.712150$

$(4.71215)^{1/3} = 1.67651 \times 4.189 = 7.022904$

$19.73920 \times 7.022904 = 138.6265$ $\qquad$ $138.6265 / 137.036 = (1.01160)^3 = 1.035223$

The first scaling confirms the second one meaning that the fine structure constant is conserved by toroidal magnetic flux induction to be stretched in alternation into the electric conjugated charge.

home to previous